IFD44-LL Series: Plasterboard

FRL **-/60/-**

Installation Instructions:
Ducted - Retro-fit

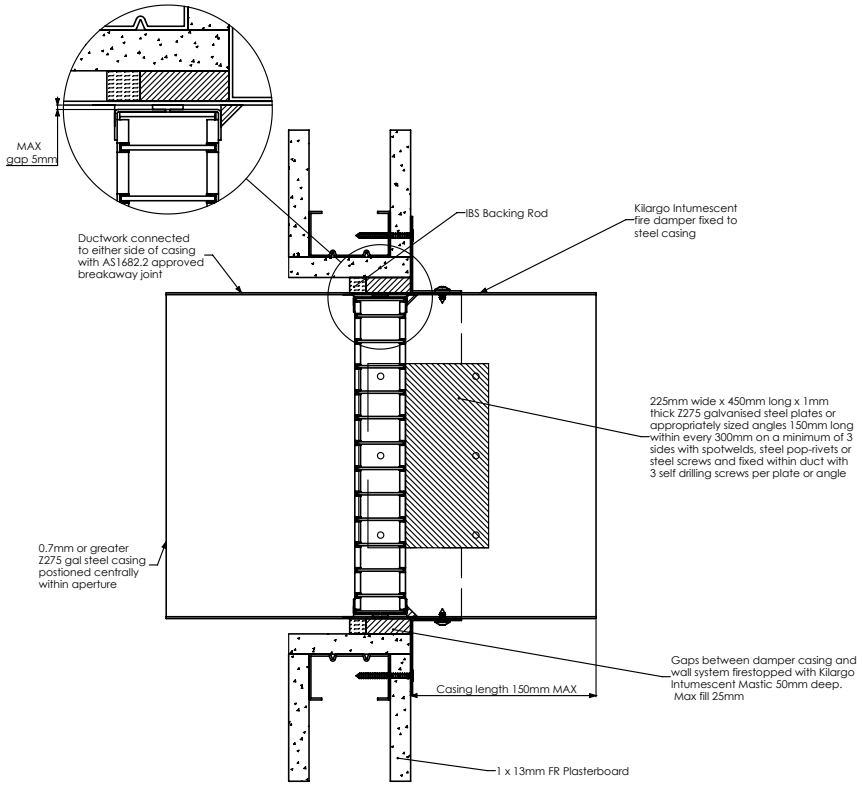

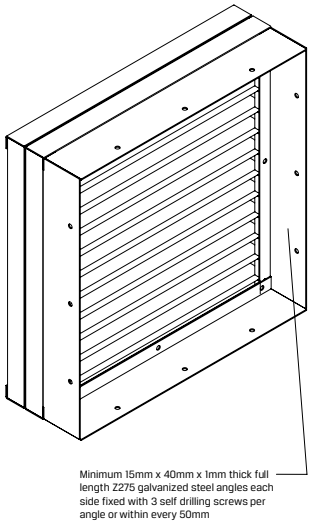

Retro-fit Option

Step 1	Fasten mounting angles or plates to damper with steel self-drilling screws or steel pop rivets as per the system drawing.
Step 2	Position damper inside ductwork within the wall thickness as per system drawing and fix mounting angles or plates with steel self-drilling screws, pop rivets or spot welds.
Step 3	Apply Kilargo Intumescent Mastic (supplied separately) to the gaps between the damper, damper casing & building element. Ensure fill depth corresponds with those detailed in the system drawing by using IBS backing rod.
Step 4	Ensure product and certification labels are in a prominent position for easy identification during subsequent maintenance inspections.
Step 5	Connect ductwork to the damper casing with AS 1682.2 compliant breakaway joint.

System Notes

- Angles, brackets, plates, IBS backing rod & fixings are to be supplied by others.
- Kilargo Intumescent Fire Dampers shall be installed in accordance with this detail, including the use of Kilargo Intumescent Mastic and in accordance with the requirements of AS1682.2.
- Ensure convenient access is provided for visual inspection and cleaning as necessary.
- 2mm Minimum gap allowable between damper and aperture. For gaps between 2-5mm, a fillet of Kilargo Intumescent Mastic shall be applied.

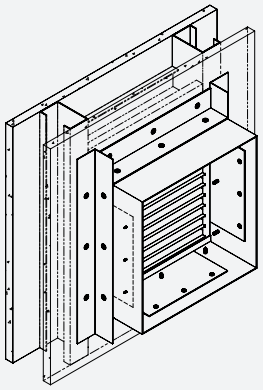

Building element:	Plasterboard 1 x 13
Application:	Retrofit cell only in ductwork
Maximum size:	300 x 300 *without build up
FRL	-/60/-
Test reference No.	FAS200229

**Max size 600 x 600 if wall thickness is built up locally with 100mm wide FR plasterboard to a minimum thickness of 116mm*

System No. WRF8

Wall Mounted Systems

15 Wentworth Place, Banyo Qld 4014
T 1300 858 010 | F +61 7 3861 9266 | E sales@kilargo.com.au | www.kilargo.com.au

Kilargo
dormakaba Group